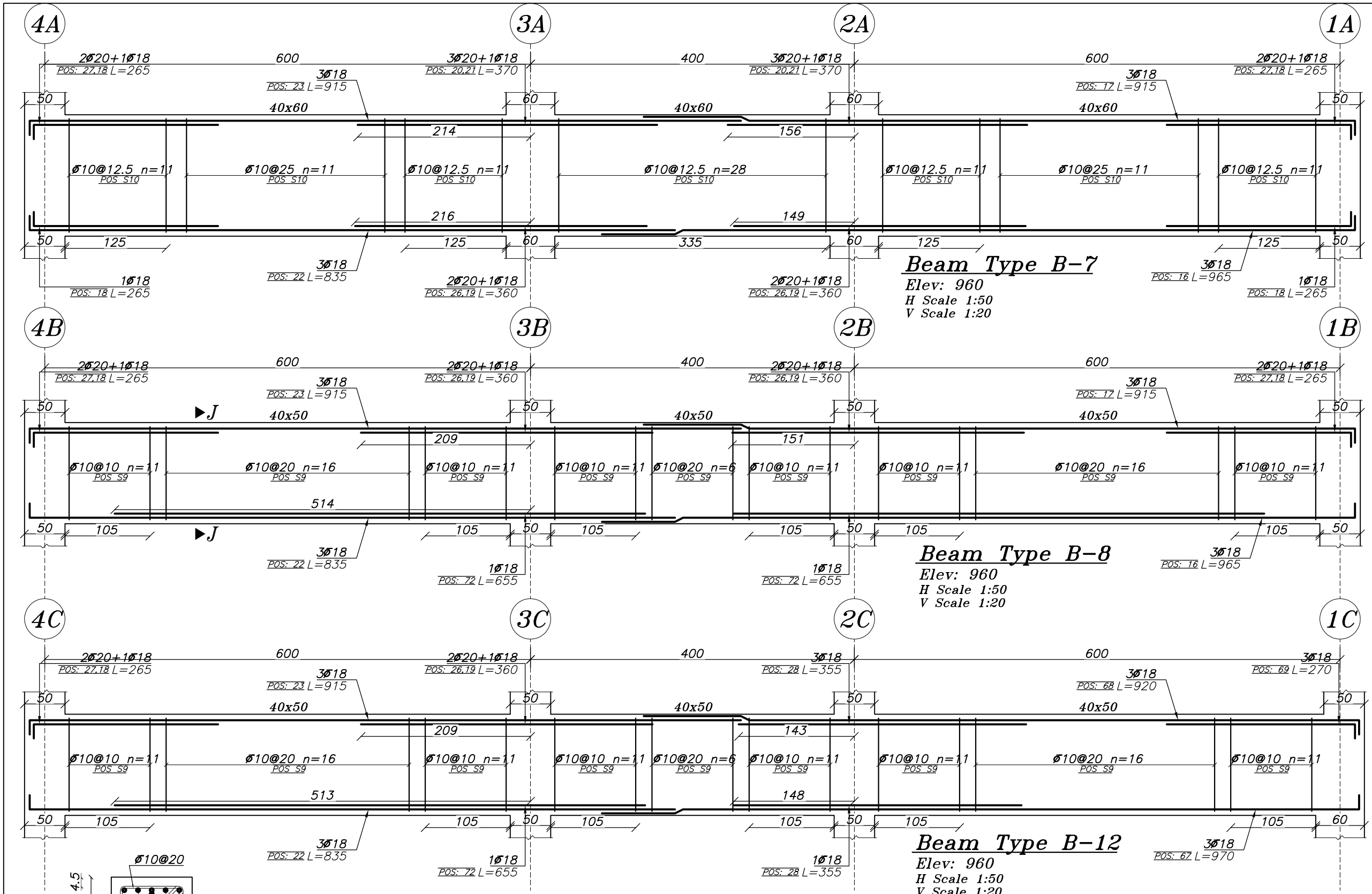

Beam Type B-7

Elev: 960
H Scale 1:50
V Scale 1:20

Beam Type B-8

Elev: 960
H Scale 1:50
V Scale 1:20

Beam Type B-12

Elev: 960
H Scale 1:50
V Scale 1:20

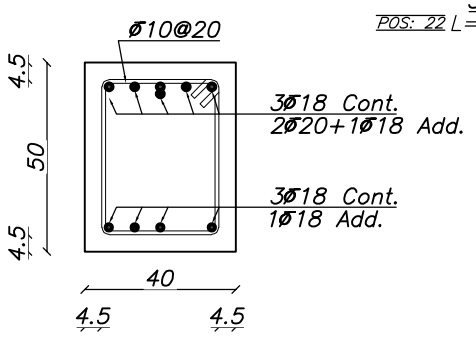

Sec. J-J

Scale 1:20

DWG NO. S-22